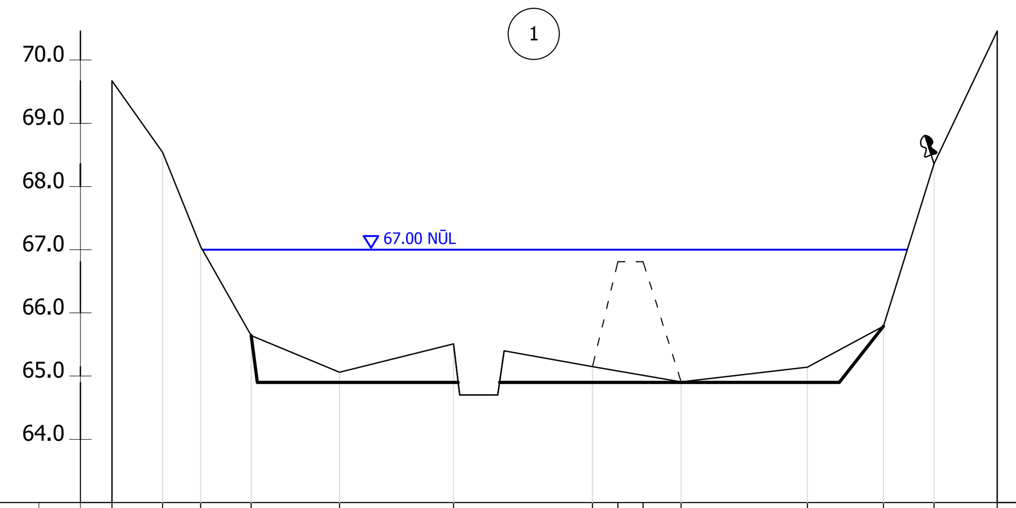


| Piketi, attālumi (m) | 1 | 0 | 4 | 7 | 11 | 18 | 27 | 38 | 40 | 42 | 45 | 55 | 61 | 64 | 71 |
|---|---|---|---|---|---|---|---|---|---|---|---|---|---|---|---|
| Esošās zemes virsmas atzīmes | 2 | 69.67 | 68.54 | 67.05 | 65.64 | 65.06 | 65.51 | 65.15 | 66.81 | 66.81 | 64.91 | 65.14 | 65.79 | 68.36 | 70.46 |
| Projektētās zemes virsmas atzīme | 3 | | | | 64.90 | 64.90 | 64.90 | 64.90 | | | 64.90 | 64.90 64.90 | 65.79 | | |
| Norokumi (-), uzbērumi (+) | 4 | | | | 0.74 | 0.16 | 0.61 | 0.25 | | | | 0.24 | | | |

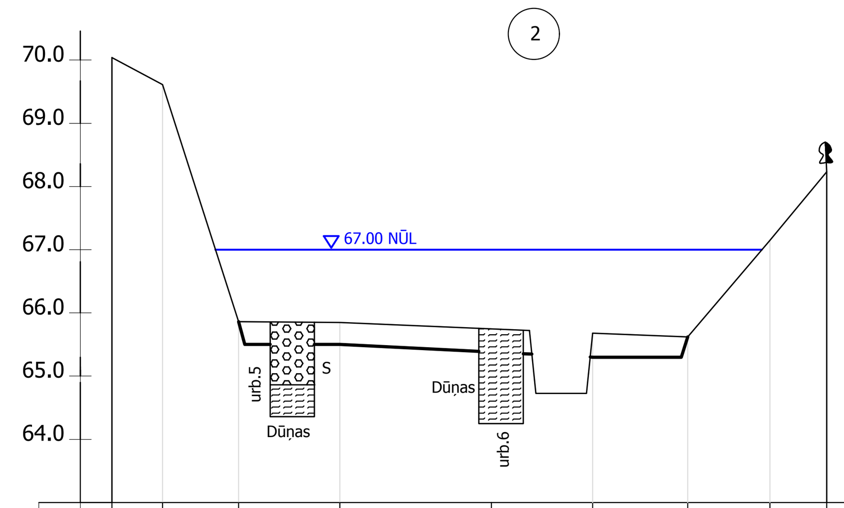


| 1 | 0 | 4 | 10 | 18 | 30 | 38 | 44.5 | 51 | 55.5 |
|---|---|---|---|---|---|---|---|---|---|
| 2 | 70.04 | 69.61 | 65.86 | 65.85 | | 65.68 | 65.62 | 67.15 | 68.23 |
| 3 | | | 65.50 | 65.50 | | 65.30 | 65.30 | | |
| 4 | | | 0.36 | 0.35 | | 0.38 | 0.52 | | |

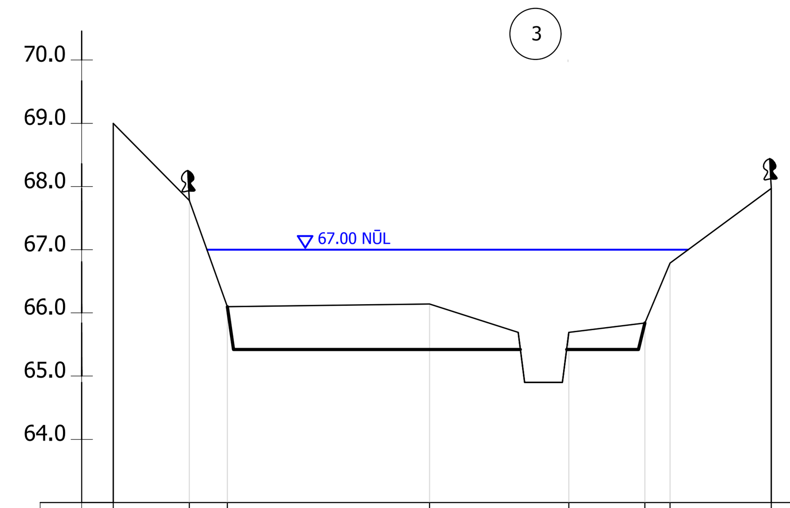


| 1 | 0 | 6 | 9 | 25 | 36 | 42 | 44 | 52 |
|---|---|---|---|---|---|---|---|---|
| 2 | 69.00 | 67.78 | 66.01 | 66.14 | 65.69 | 65.84 | 66.79 | 67.97 |
| 3 | | | 65.50 | 65.50 | 65.50 | 65.50 | | |
| 4 | | | 0.51 | 0.74 | 0.19 | 0.34 | | |

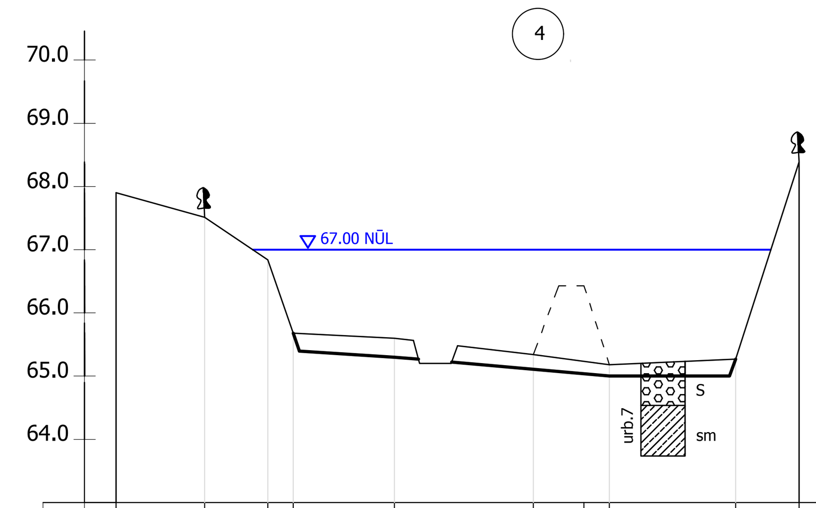


| 1 | 0 | 7 | 12 | 14 | 22 | 33 | 37 | 39 | 49 | 54 |
|---|---|---|---|---|---|---|---|---|---|---|
| 2 | 67.90 | 67.51 | 66.84 | 65.68 | 65.60 | 65.34 | 66.43 | 65.18 | 65.27 | 68.39 |
| 3 | | | | 65.40 | 65.30 | | | 65.00 | 65.00 | |
| 4 | | | | 0.28 | 0.30 | | | 0.18 | 0.27 | |

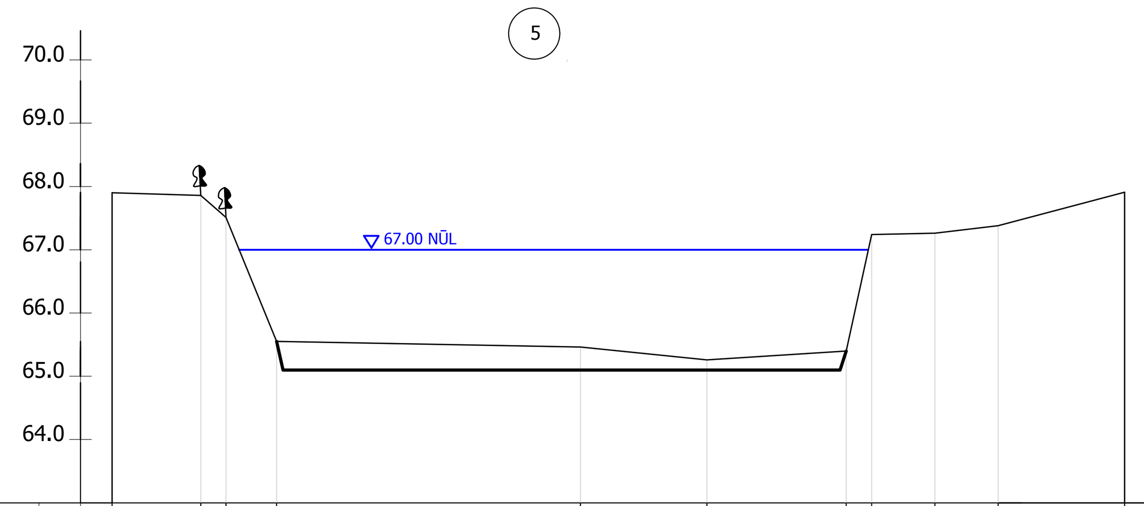


| Piketi, attālumi (m) | 1 | 0 | 7 | 9 | 13 | 37 | 47 | 58 | 60 | 65 | 70 | 80 |
|---|---|---|---|---|---|---|---|---|---|---|---|---|
| Esošās zemes virsmas atzīmes | 2 | 67.90 | 67.86 | 67.51 | 65.55 | 65.46 | 65.26 | 65.40 | 67.24 | 67.26 | 67.38 | 67.91 |
| Projektētās zemes virsmas atzīme | 3 | | | | 65.10 | 65.10 | 65.10 | 65.10 | | | | |
| Norokumi (-), uzbērumi (+) | 4 | | | | 0.45 | 0.36 | | 0.30 | | | | |

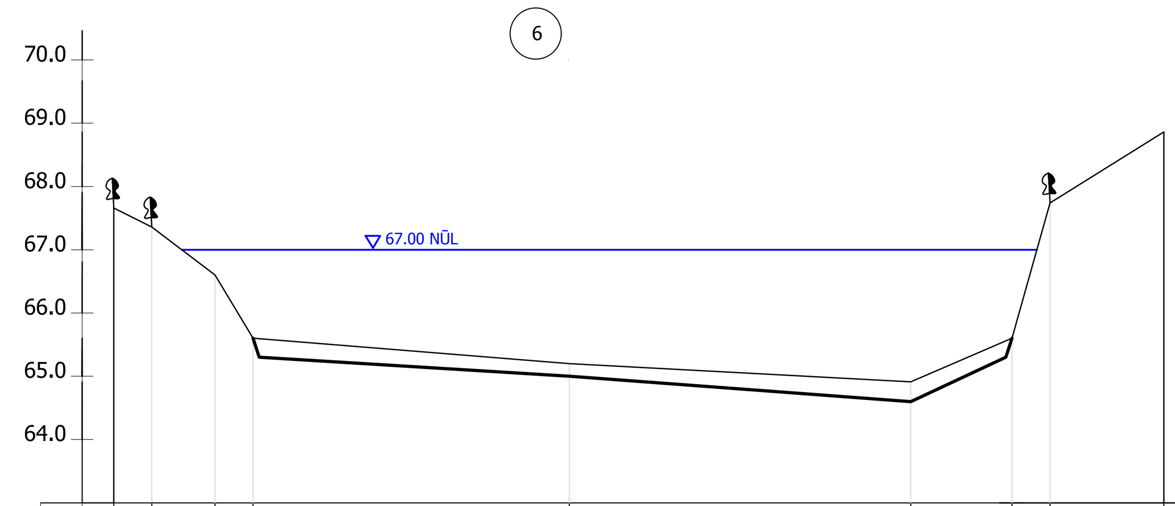


| 1 | 0 | 3 | 8 | 11 | 36 | 63 | 71 | 74 | 83 |
|---|---|---|---|---|---|---|---|---|---|
| 2 | 67.66 | 67.36 | 66.60 | 65.60 | 65.20 | 64.91 | 65.60 | 67.74 | 68.86 |
| 3 | | | | 65.30 | 65.00 | 64.60 | 65.30 | | |
| 4 | | | | 0.30 | 0.20 | 0.31 | 0.30 | | |

Piezīmes:

1. Augstumu atzīmes dotas metros LAS 2000,5.
2. Šķērsprofilu izvietojumu plānā skatīt lapā BO - 1.

| | | | |
|---|---|---|---|
| Valsts sabiedrība ar ierobežotu atbildību "Meliorprojekts" Būvkomersanta reģistrācijas apliecība Nr. 0081 - R | Pasūtītājs : Priekules novada pašvaldība Reģ. Nr. 90000031601 | | |
| | Dīķa slūžu atjaunošana "Valta Birzī" Priekulē | | |
| Autors R.Kuklis | Dīķa tīrīšana | Stadija BP | Lapas Nr. BO - 2 | 
| Pārbaudīja J.Puriņš | | | Lapu sk. 1 |
| | Šķērsprofili 1÷6 | 2016. gads | Šifrs 5423 |
| | | | M V 1 : 100 H 1 : 500 |